NaLA® N18HP1/4-1Ø

Product Specification For Inductive Differential Mode Choke Components

MH&W International Corp.
CoolBLUE®
Inductive Absorbers

MH&W International Corp.

575 Corporate Drive Mahwah, NJ 07430 USA

Phone 201-252-8125 Email: coolblue@mhw-intl.com

Mechanical Specification

Part Number:
N18HP1/4-1Ø

Nominal Core Dimensions:
0.98 X 0.79 X 0.39 inch
(25 x 20 x 10 mm)

Finished Core Dimensions:
OD ≤ 1.09 inch (27.06 mm)
ID ≥ 0.70 inch (17.8 mm)
H ≤ 0.49 inch (12.5 mm)

ℓ_ε = 7.1 cm A_ε = 0.20 cm²

Currie Temp = 1,112°F (600 °C)
RTI Temp (0.81) = 248°F (120°C)

Core Material: Nanoperm®
Marking: N18HP1/4-1Ø

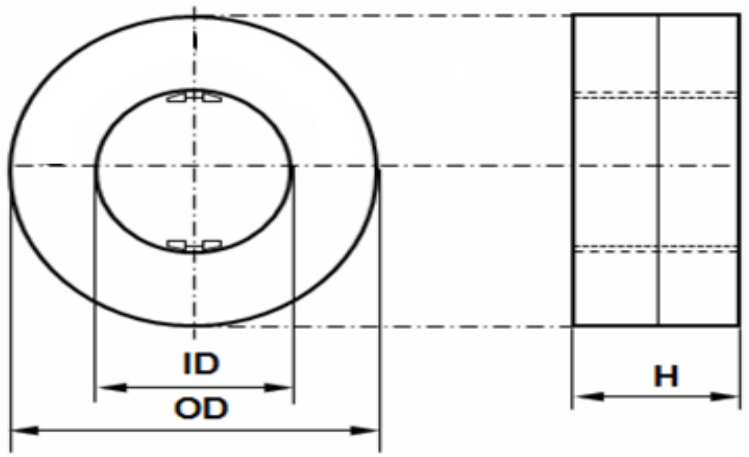

Notes:
Packing: 63 pc per layer, 6 layers/box; Box Quantity = 378 pcs

Electrical Core Performance

Permeability @ frequency = 10 KHz and Hpeak = 3.0 mA/cm ~90,000

	Measured Value	Measurement Limits	Frequency	L_{eff} * N (mA*turn)
Inspection Value	A_ℓ (μH/N²)	22.5 - 41.3	10 KHz	15
	A_ℓ (μH/N²)	5.6 min	100 KHz	15

Core Finishing

Type:	BROWN Case	Case material:	PA66-GF25 FR Ultramid BASF Corp A3X2G5 - Brown
Case UL file Number:	E36632	Voltage Breakdown:	2,500 volts rms between two copper wires on the core

Certification

MH&W International certifies that the manufacturing and the quality process meet all requirements of IEC Part 1: General Specification for "Fixed Inductors For Electromagnetic Interference Suppression", IEC 60938-1:1999 + A1:2006. This International Standard is used in lieu of requirements/documents pertaining to UL, CE, CSA, DIN and other individual agencies. The flame insulation rating meets UL-94V-0.

MH&W International certifies the product described herein is in compliance with the Directive 2011/65/EU of the European Parliament and of the council of 8 June, 2011 on the Restriction of the use of Certain Hazardous Substances in Electrical and Electronic Equipment (RoHS2 Directive).

Revision #	DATE	Alteration	Drawing Approval	
4	8/17/2017	INITIAL ISSUE	Engineering:	K. Giles
			Sales:	B. Wilson
			Drawing Number: N18HP1/4-1Ø	